THERMA-TRU DOORS

Fiber-Classic® & Smooth-Star®

COMPOSITE EDGE OPAQUE FIBERGLASS SINGLE DOOR w/ SIDELITE(S)

INSWING/OUTSWING "NON-IMPACT"

L F Schmidt

L. F. SCHMIDT LICENSE No. 43409 STATE OF FLORIDA PROFESSIONAL ENGINEER

Digitally signed by Lyndon F Schmidt
Date: 2023.07.19 15:04:41 -04'00'

This item has been digitally signed and sealed by **L. F. Schmidt, P.E.** on the date adjacent to the seal.

Printed copies of this document are not considered signed and sealed and the signature must be verified on any electronic copies.

THIS PRODUCT APPROVAL IS VALID ONLY FOR THE STATE OF FLORIDA

GENERAL NOTES

1. This product has been evaluated and is in compliance with the 8th Edition (2023) Florida Building Code (FBC) structural requirements excluding the "High Velocity Hurricane Zone" (HVHZ).
2. Product anchors shall be as listed and spaced as shown on details. Anchor embedment to base material shall be beyond wall dressing or stucco.
3. When used in areas requiring wind borne debris protection, this product is required to be protected with an impact resistant covering that complies with FBC Sections 1609.1.2 & R301.2.1.2 as follows: Wind Zones 1, 2 & 3: Glazed Sidelites only; Wind Zone 4: Entire System.
4. For 2x stud framing construction, anchoring of these units shall be the same as that shown for 2x buck masonry construction.
5. Site conditions that deviate from the details of this drawing require further engineering analysis by a licensed engineer or registered architect.
6. Fiber-Classic & Smooth-Star Door and Sidelite panels require the use of "J" part numbers and must be stained or painted within six months of installation.

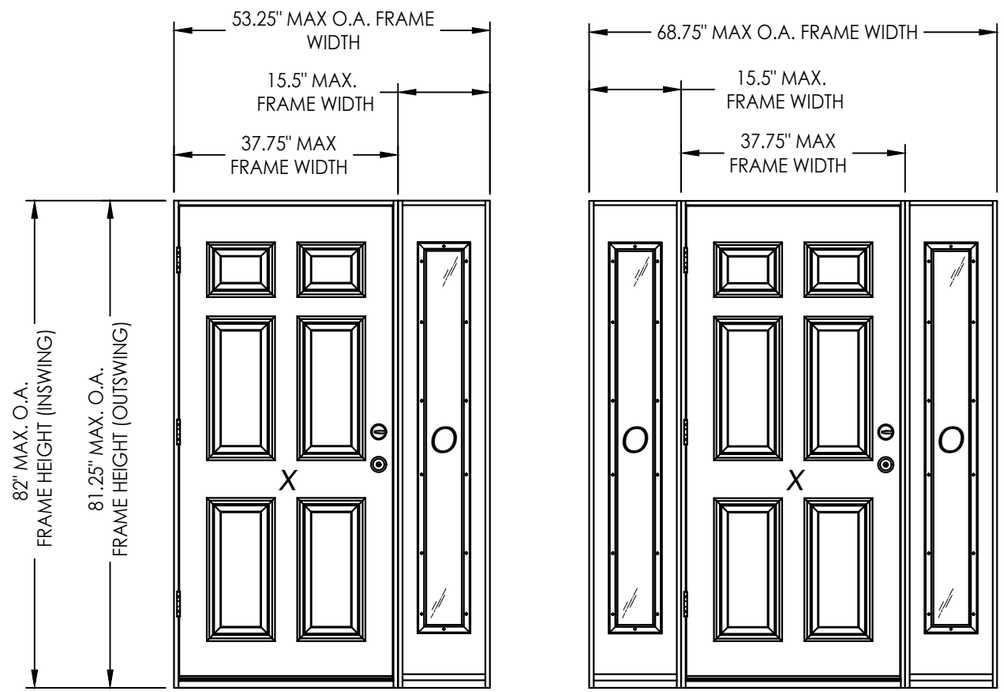

CONFIGURATION	DESIGN PRESSURE (PSF) INSWING		DESIGN PRESSURE (PSF) OUTSWING	
	POSITIVE	NEGATIVE	POSITIVE	NEGATIVE
XO, OX, OXO	+45.0	-50.0	+45.0	-45.0

See Sheet 4 for Hardware Specifications

TABLE OF CONTENTS

SHEET #	DESCRIPTION
1	Typical Elevations, Design Pressures & General Notes
2	Door Panel Details
3	Sidelite Panel Details
4	Elevations
5	Horizontal & Vertical Cross Sections (2X Buck)
6	Horizontal & Vertical Cross Sections (1X Buck)
7	Horizontal & Vertical Cross Sections (Direct to Masonry)
8	Vertical Cross Sections (Thresholds)
9	Buck Anchoring
10	Frame Anchoring
11	Hardware Details
12	Glazing Details
13	Components
14	Bill of Materials

Documents Prepared By:
Lyndon F. Schmidt
P.E. No. 43409

RW BUILDING CONSULTANTS, INC.
P.O. Box 230, Valrico, FL 33595
Phone No.: 813.659.9197
FBPE Registry No. 9813

PRODUCT: THERMA-TRU FIBERGLASS DOOR

PART OR ASSEMBLY: TYPICAL ELEVATION, DESIGN PRESSURES & GENERAL NOTES

REVISIONS

NO.	DATE		BY
5	7/19/23	UPDATE TO 8TH ED. (2023) FBC	LFS
4	7/21/20	UPDATE TO 7th ED (2020) FBC	LFS
3	10/09/18	REV. DOOR PANEL OPTION NOTE	MT
2	11/15/17	RECESSED PANEL NOTATION	JK
1	7/7/17	UPDATE TO 6th ED (2017) FBC	JK

DATE: 8/10/16
SCALE: N.T.S.
DWG. BY: JK
CHK. BY: LFS
DRAWING NO.: FL-20461.2
SHEET 1 OF 14

© 2016 R.W. BUILDING CONSULTANTS INC.

Z:\2023 FBC Drawings\Therma-Tru\ThermaTru FL 20461\FL-20461.1-5.dwg

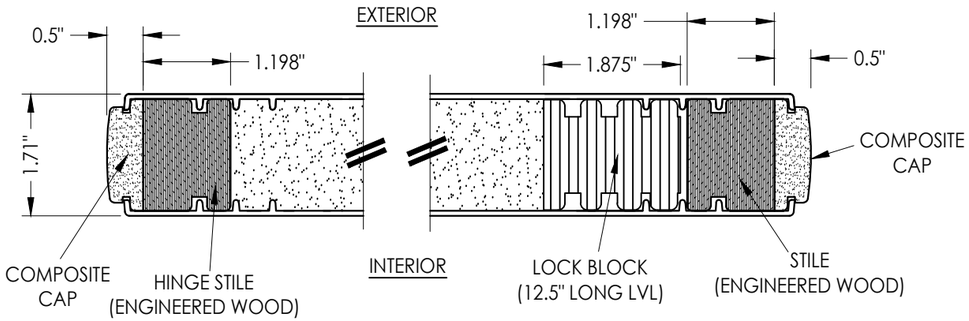

1/2 **HORIZONTAL CROSS SECTION**

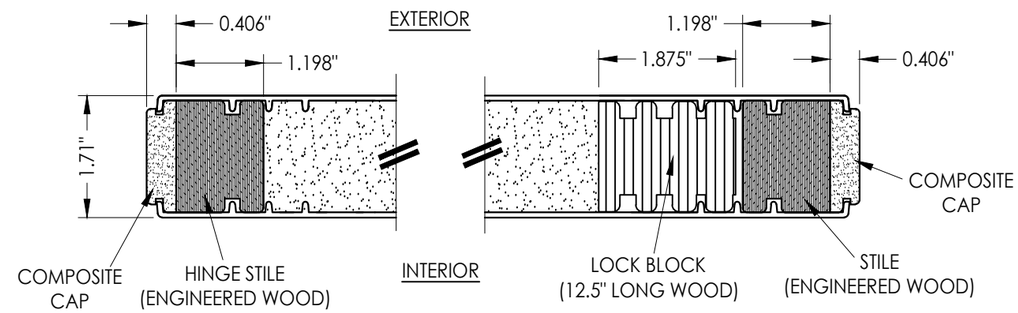

2/2 **HORIZONTAL CROSS SECTION**

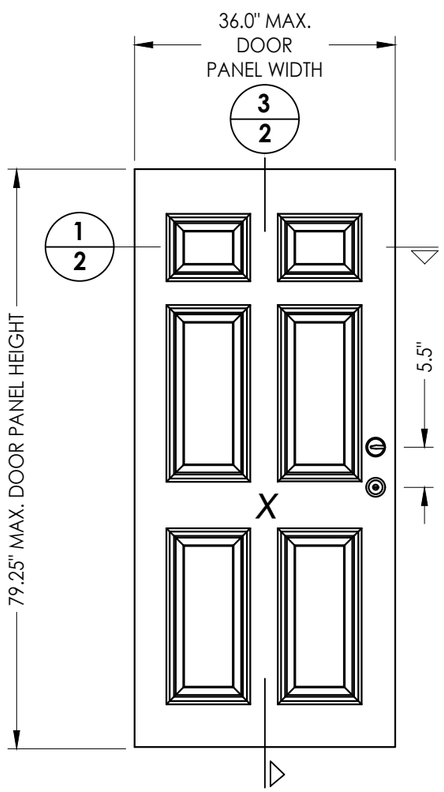

40 **DOOR PANEL** BOOK

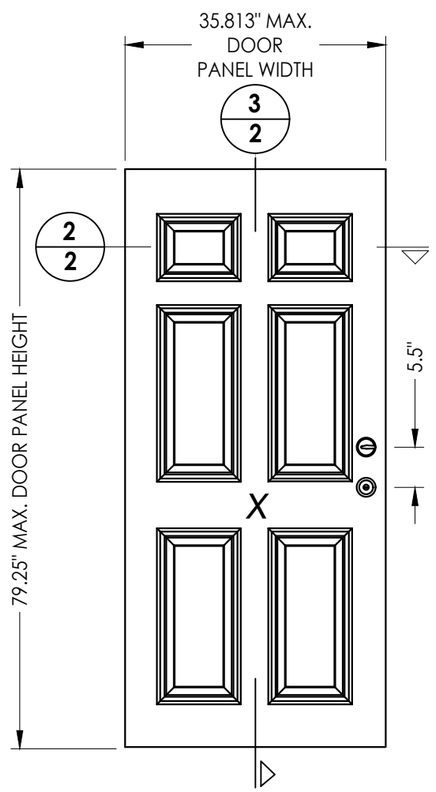

41 **DOOR PANEL** Hybrid Door

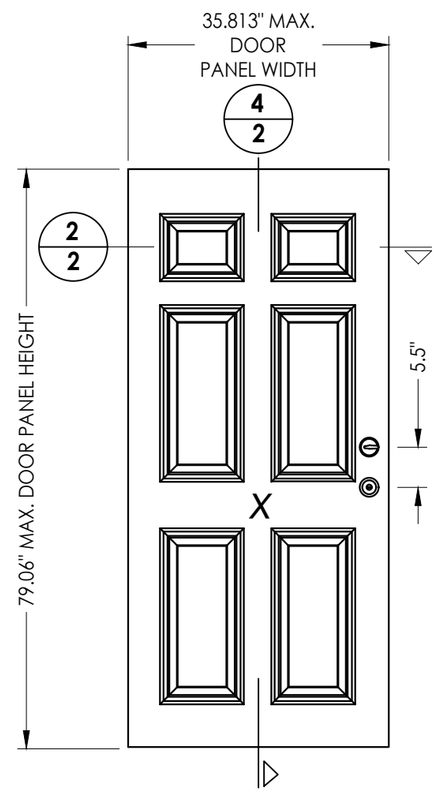

42 **DOOR PANEL** U1 Door

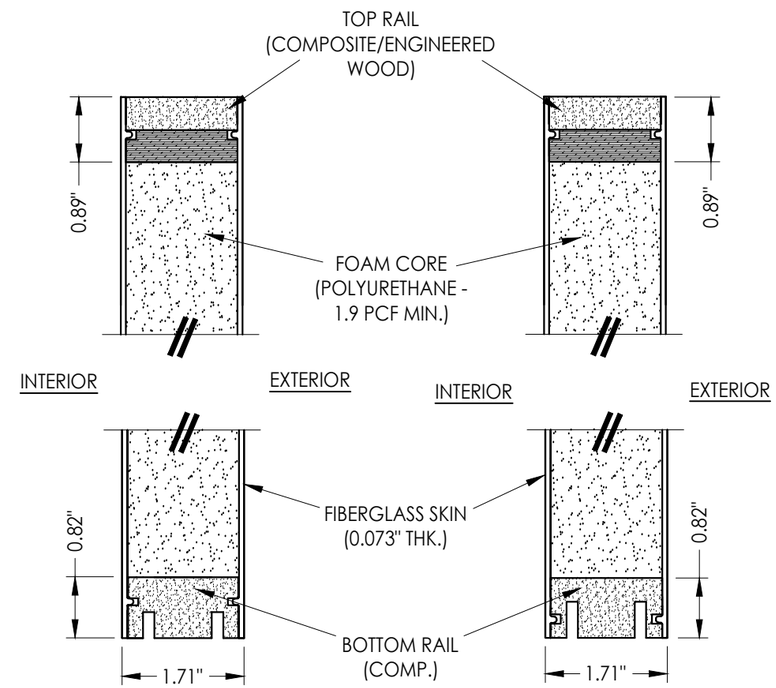

3/2 **VERTICAL CROSS SECTION**

4/2 **VERTICAL CROSS SECTION**

Documents Prepared By:
Lyndon F. Schmidt
P.E. No. 43409

R.W. BUILDING CONSULTANTS, INC.
P.O. Box 230, Valrico, FL 33595
Phone No.: 813.659.9197
FBPE Registry No. 9813

PRODUCT: THERMA-TRU FIBERGLASS DOOR

PART OR ASSEMBLY: DOOR PANEL DETAILS

NO.	DATE	REVISIONS	BY
5	7/19/23	UPDATE TO 8TH ED. (2023) FBC	LFS
4	7/21/20	UPDATE TO 7th ED (2020) FBC	LFS
3	10/09/18	REV. DOOR PANEL OPTION NOTE	MT
2	11/15/17	RECESSED PANEL NOTATION	JK
1	7/7/17	UPDATE TO 6th ED (2017) FBC	JK

DATE: 8/10/16
SCALE: N.T.S.
DWG. BY: JK
CHK. BY: LFS
DRAWING NO.: FL-20461.2
SHEET 2 OF 14

© 2016 R.W. Building Consultants Inc.

Z:\2023 FBC Drawings\Therma-Tru\ThermaTru FL 20461\FL-20461.1-5.dwg

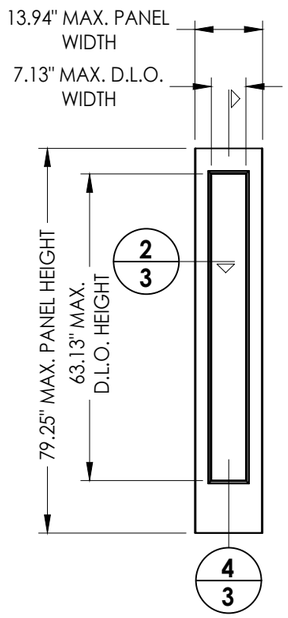

60 SIDELITE PANEL
Full Lite
Flush Glazed

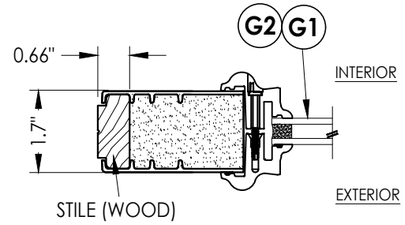

1/3 HORIZONTAL CROSS SECTION
Lip Lite Glazing

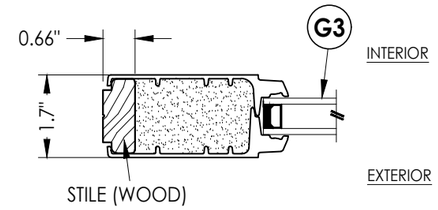

2/3 HORIZONTAL CROSS SECTION
Flush Glazing

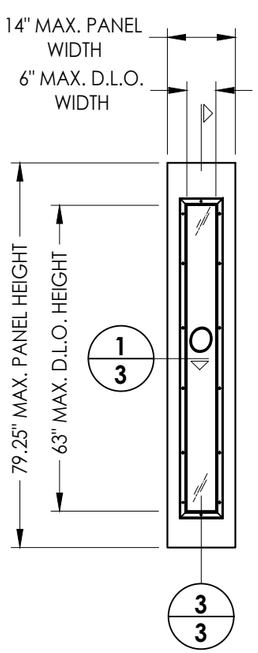

50 SIDELITE PANEL
Full Lite
Lip Lite

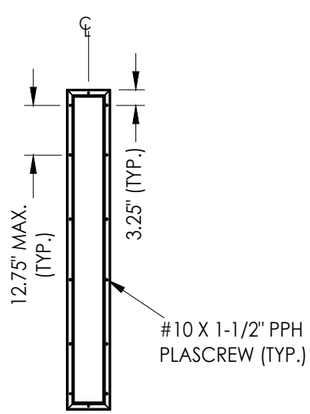

BTS FULL LITE FRAME

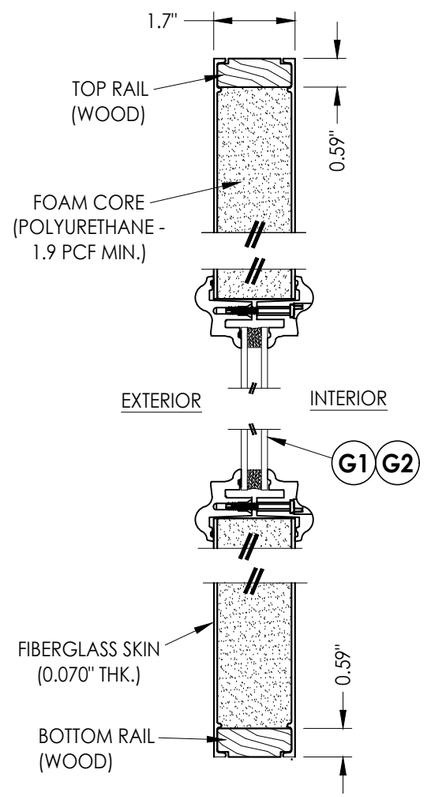

3/3 VERTICAL CROSS SECTION
Lip Lite Glazing Shown

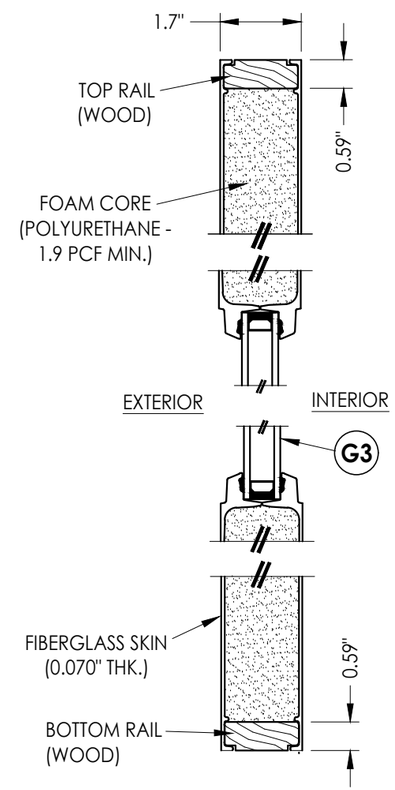

4/3 VERTICAL CROSS SECTION
Flush Glazing Shown

Documents Prepared By:
Lyndon F. Schmidt
P.E. No. 43409
RW BUILDING CONSULTANTS, INC.
P.O. Box 230, Valrico, FL 33595
Phone No.: 813.659.9197
FBPE Registry No. 9813

PRODUCT: THERMA TRU FIBERGLASS DOOR

PART OR ASSEMBLY: SIDELITE PANEL DETAILS

REVISIONS

NO.	DATE		BY
5	7/19/23	UPDATE TO 8TH ED. (2023) FBC	LFS
4	7/21/20	UPDATE TO 7th ED (2020) FBC	LFS
3	10/09/18	REV. DOOR PANEL OPTION NOTE	MT
2	11/15/17	RECESSED PANEL NOTATION	JK
1	7/7/17	UPDATE TO 6th ED (2017) FBC	JK

DATE: 8/10/16
SCALE: N.T.S.
DWG. BY: JK
CHK. BY: LFS
DRAWING NO.: FL-20461.2
SHEET 3 OF 14

Z:\2023 FBC Drawings\Therma-Tru\ThermaTru FL 20461\FL-20461.1-5.dwg
© 2016 R.W. Building Consultants Inc.

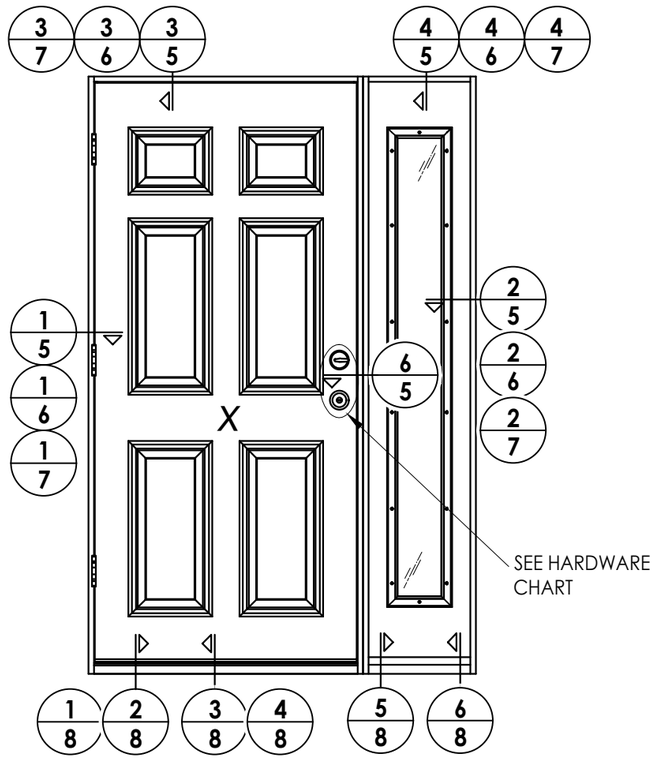

ELEVATION
XO

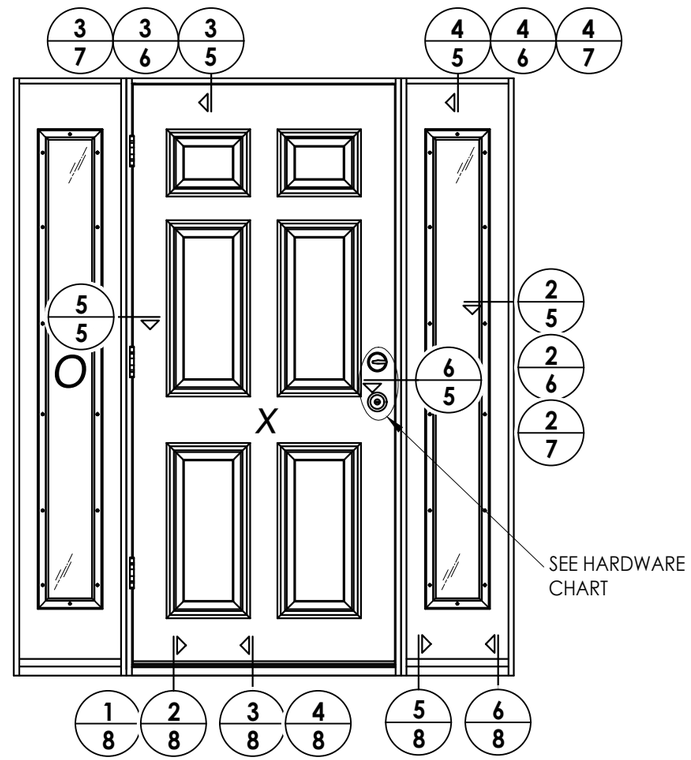

ELEVATION
OXO

HARDWARE TABLE	
MANUFACTURER	MODEL
SCHLAGE	KNOB: F51 DEADBOLT: B60
KWIKSET	KNOB: SIGNATURE SERIES DEADBOLT: SIGNATURE SERIES (980)
HOPPE (THERMA-TRU)	MULTIPOINT : MPDGART (3 pt. Manual Tongue)

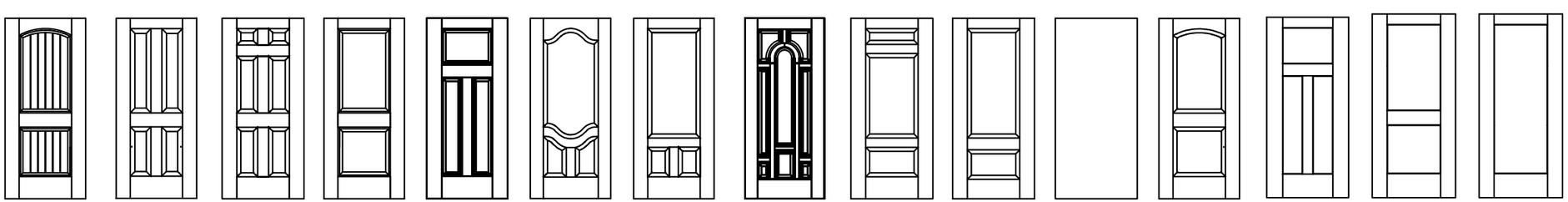

Fiber-Classic/Smooth-Star Door Panel Options

Products approved include all embossed and recessed panel doors.
Similar glazed panel configurations are allowed.
Panels shown are for illustration and are representative only.

Documents Prepared By:
Lyndon F. Schmidt
P.E. No. 43409

RW BUILDING CONSULTANTS, INC.
P.O. Box 230, Valrico, FL 33595
Phone No.: 813.659.9197
FBPE Registry No. 9813

PRODUCT: THERMA-TRU FIBERGLASS DOOR

PART OR ASSEMBLY: ELEVATIONS

NO.	DATE	REVISIONS	BY
5	7/19/23	UPDATE TO 8TH ED. (2023) FBC	LFS
4	7/21/20	UPDATE TO 7th ED (2020) FBC	LFS
3	10/09/18	REV. DOOR PANEL OPTION NOTE	MT
2	11/15/17	RECESSED PANEL NOTATION	JK
1	7/7/17	UPDATE TO 6th ED (2017) FBC	JK

DATE: 8/10/16
SCALE: N.T.S.
DWG. BY: JK
CHK. BY: LFS
DRAWING NO.: FL-20461.2
SHEET 4 OF 14

© 2016 R.W. BUILDING CONSULTANTS INC.

Z:\2023 FBC Drawings\Therma-Tru\ThermaTru FL 20461\FL-20461.1-5.dwg

Notes:
1. Sidelite assembly screws located 7" from top and 14" from bottom & 2 more screws equally spaced between (4 screws total per side jamb).
2. Sidelite assembly screws located 4" from each end (2 screws along head jamb).

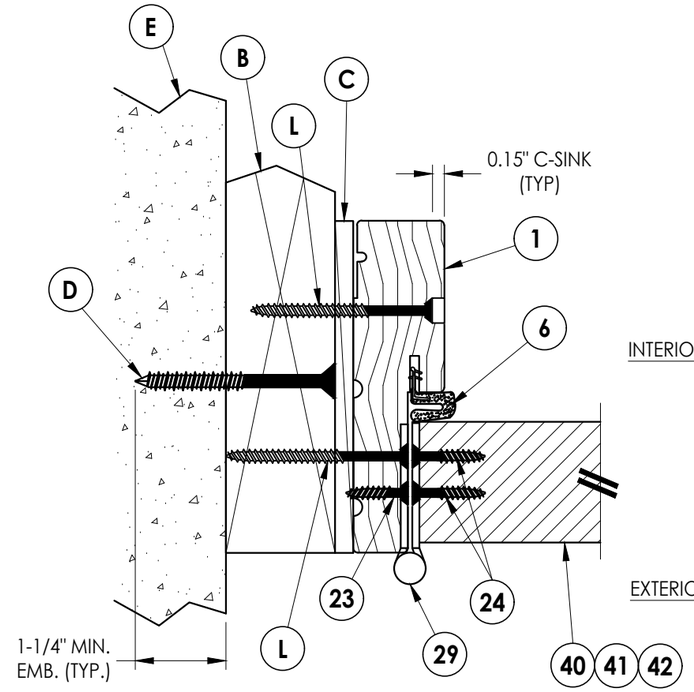

1/5 **HORIZONTAL CROSS SECTION**
Shown w/ 2X Buck
Outswing shown (Inswing similar)

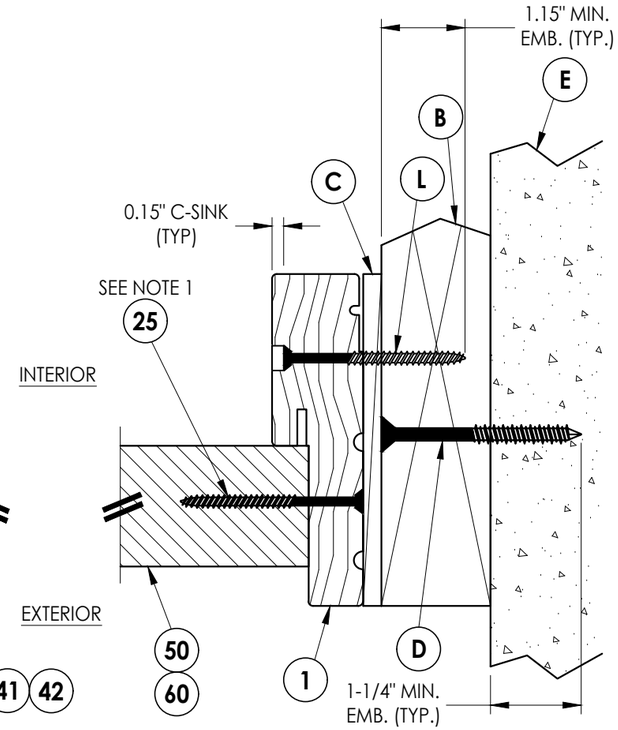

2/5 **HORIZONTAL CROSS SECTION**
Shown w/ 2X Buck
Outswing shown (Inswing similar)

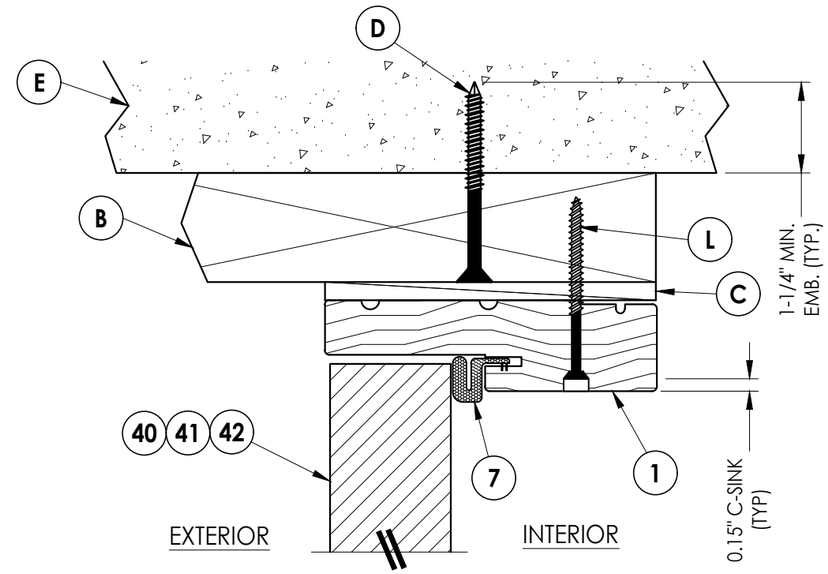

3/5 **VERTICAL CROSS SECTION**
Shown w/ 2X Buck
Outswing shown (Inswing similar)

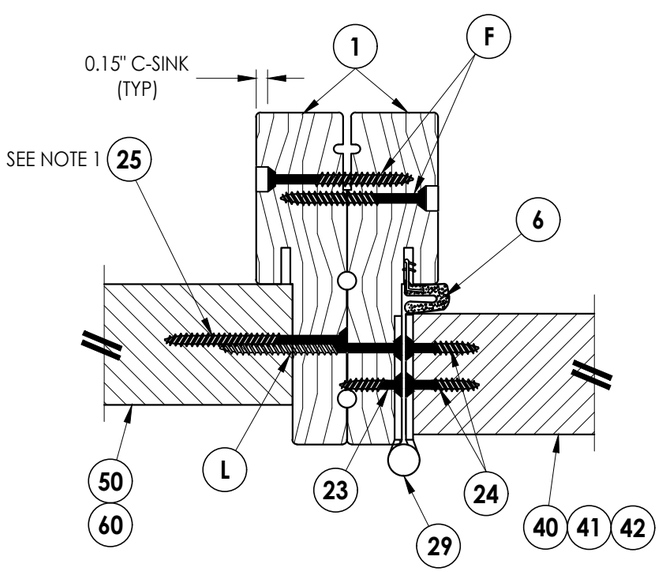

5/5 **HORIZONTAL CROSS SECTION**
Outswing shown (Inswing similar)

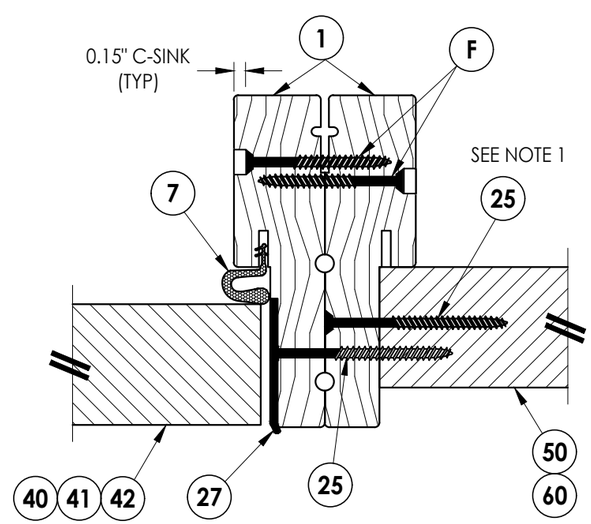

6/5 **HORIZONTAL CROSS SECTION**
Outswing shown (Inswing similar)

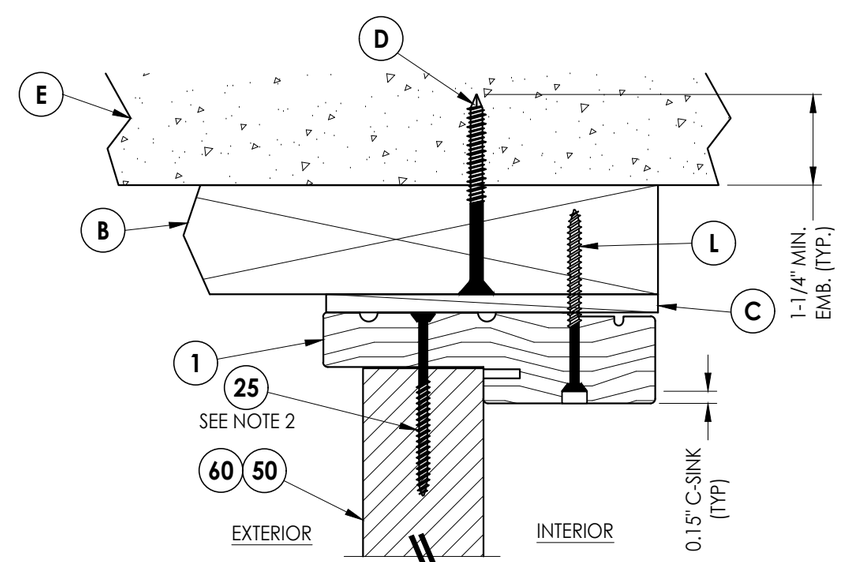

4/5 **VERTICAL CROSS SECTION**
Shown w/ 2X Buck
Outswing shown (Inswing similar)

Documents Prepared By:
Lyndon F. Schmidt
P.E. No. 43409
RW BUILDING CONSULTANTS, INC.
P.O. Box 230, Valrico, FL 33595
Phone No.: 813.659.9197
FBPE Registry No. 9813

PRODUCT: *THERMA–TRU FIBERGLASS DOOR*

PART OR ASSEMBLY: *HORIZONTAL & VERTICAL CROSS SECTIONS (2X BUCK)*

REVISIONS

NO.	DATE		BY
5	7/19/23	UPDATE TO 8TH ED. (2023) FBC	LFS
4	7/21/20	UPDATE TO 7th ED (2020) FBC	LFS
3	10/09/18	REV. DOOR PANEL OPTION NOTE	MT
2	11/15/17	RECESSED PANEL NOTATION	JK
1	7/7/17	UPDATE TO 6th ED (2017) FBC	JK

DATE: 8/10/16
SCALE: N.T.S.
DWG. BY: JK
CHK. BY: LFS
DRAWING NO.: FL–20461.2
SHEET 5 OF 14

© 2016 R.W. BUILDING CONSULTANTS INC.

Z:\2023 FBC Drawings\Therma-Tru\ThermaTru FL 20461\FL-20461.1-5.dwg

Notes:
1. Sidelite assembly screws located 7" from top and 14" from bottom & 2 more screws equally spaced between (4 screws total per side jamb).
2. Sidelite assembly screws located 4" from each end (2 screws along head jamb).

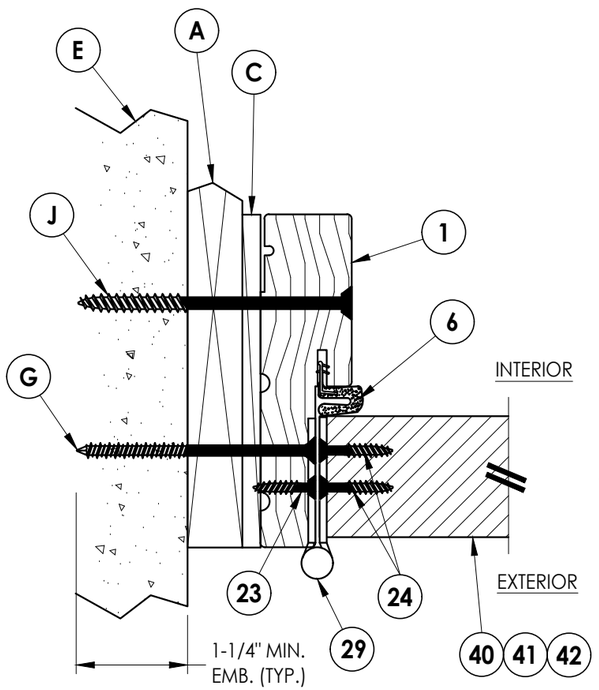

1/6 HORIZONTAL CROSS SECTION
Shown w/ 1X sub-buck
Outswing shown (Inswing similar)

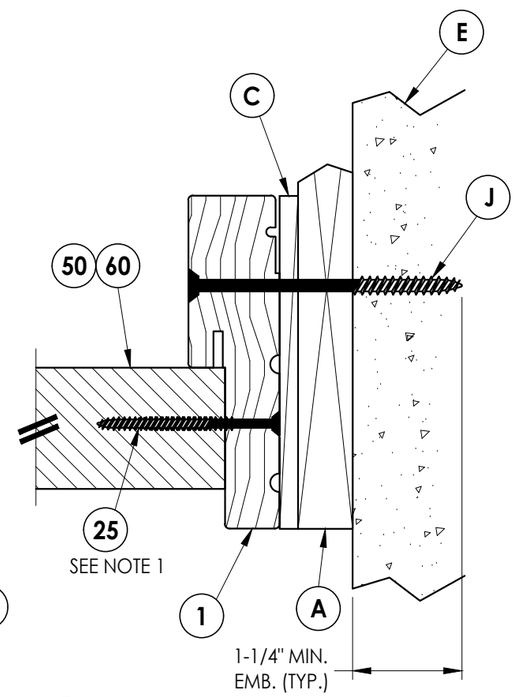

2/6 HORIZONTAL CROSS SECTION
Shown w/ 1X sub-buck
Outswing shown (Inswing similar)

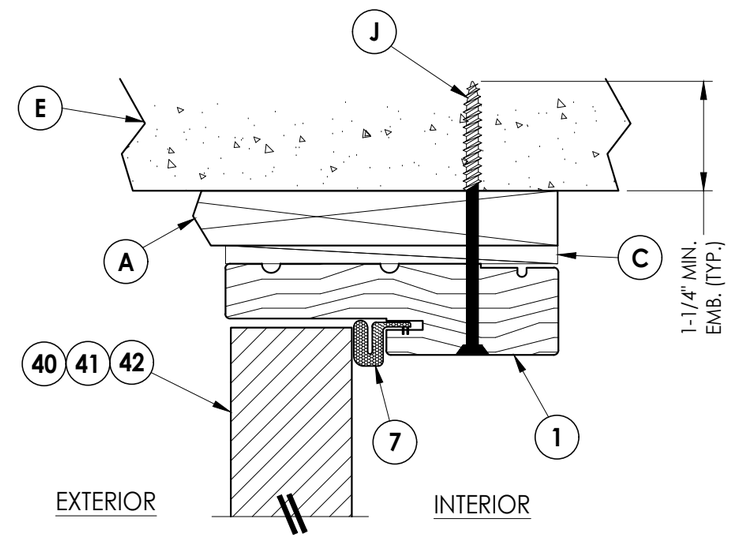

3/6 VERTICAL CROSS SECTION
Shown w/ 1X sub-buck
Outswing shown (Inswing similar)

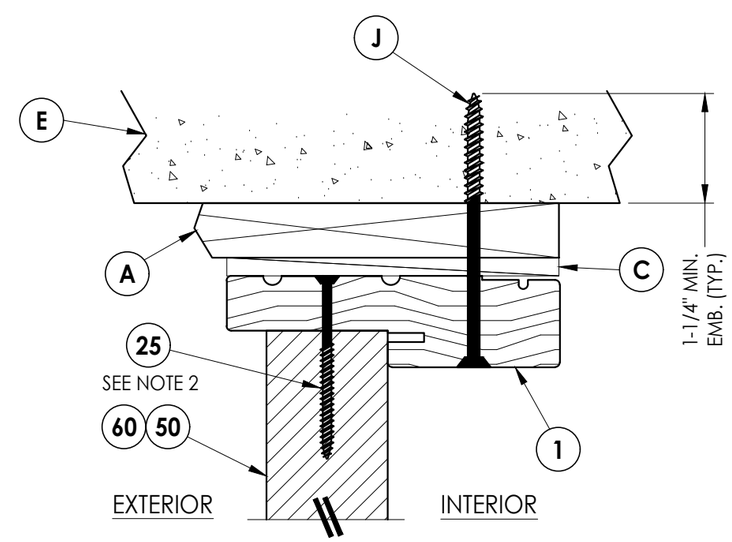

4/6 VERTICAL CROSS SECTION
Shown w/ 1X sub-buck
Outswing shown (Inswing similar)

Documents Prepared By:
Lyndon F. Schmidt
P.E. No. 43409

RW BUILDING CONSULTANTS, INC.
P.O. Box 230, Valrico, FL 33595
Phone No.: 813.659.9197
FBPE Registry No. 9813

PRODUCT: THERMA-TRU FIBERGLASS DOOR

PART OR ASSEMBLY: HORIZONTAL & VERTICAL CROSS SECTIONS (1X BUCK)

REVISIONS

NO.	DATE		BY
5	7/19/23	UPDATE TO 8TH ED. (2023) FBC	LFS
4	7/21/20	UPDATE TO 7th ED (2020) FBC	LFS
3	10/09/18	REV. DOOR PANEL OPTION NOTE	MT
2	11/15/17	RECESSED PANEL NOTATION	JK
1	7/7/17	UPDATE TO 6th ED (2017) FBC	JK

DATE: 8/10/16
SCALE: N.T.S.
DWG. BY: JK
CHK. BY: LFS
DRAWING NO.: FL-20461.2
SHEET 6 OF 14

© 2016 R.W. Building Consultants Inc.

Z:\2023 FBC Drawings\Therma-Tru\ThermaTru FL 20461\FL-20461.1-5.dwg

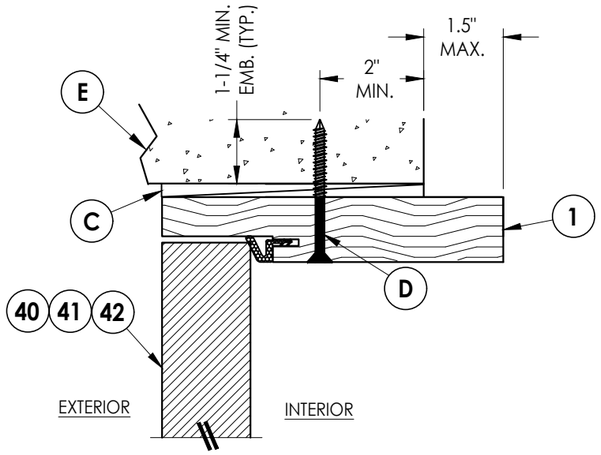

3/7 HORIZONTAL CROSS SECTION
Shown Direct to Masonry
Outswing only w/ 6-9/16" jamb

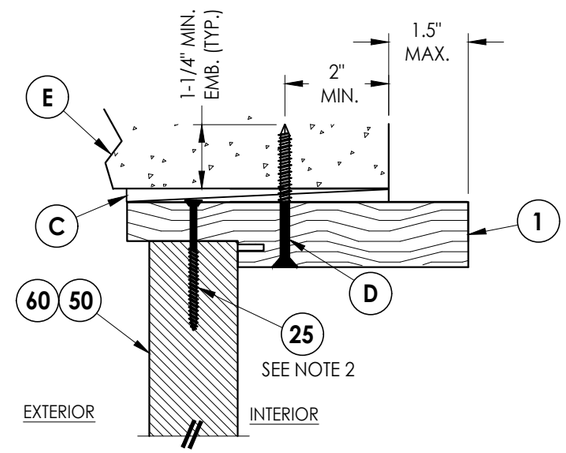

4/7 VERTICAL CROSS SECTION
Shown Direct to Masonry
Outswing only w/ 6-9/16" jamb

Notes:
1. Sidelite assembly screws located 7" from top and 14" from bottom & 2 more screws equally spaced between (4 screws total per side jamb).
2. Sidelite assembly screws located 4" from each end (2 screws along head jamb).

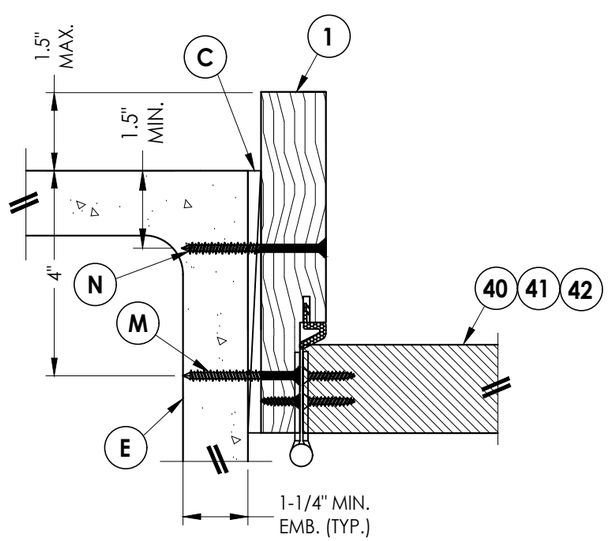

1/7 HORIZONTAL CROSS SECTION
Shown Direct to Masonry
Outswing only w/ 6-9/16" jamb

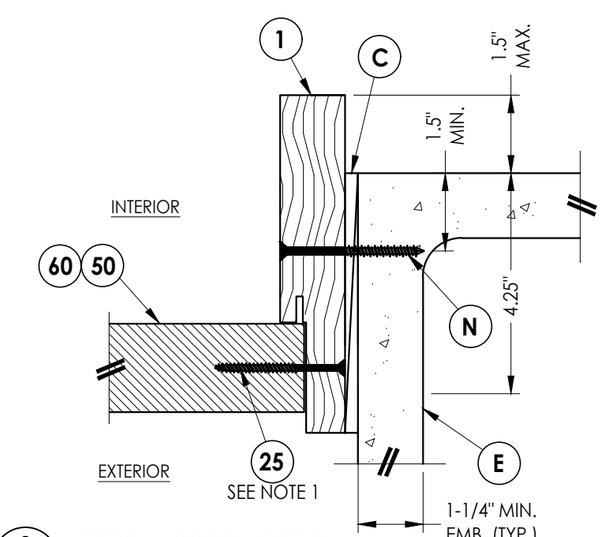

2/7 VERTICAL CROSS SECTION
Shown Direct to Masonry
Outswing only w/ 6-9/16" jamb

Documents Prepared By:
Lyndon F. Schmidt
P.E. No. 43409

RW BUILDING CONSULTANTS, INC.
P.O. Box 230, Valrico, FL 33595
Phone No.: 813.659.9197
FBPE Registry No. 9813

PRODUCT: THERMA–TRU FIBERGLASS DOOR

PART OR ASSEMBLY: HORIZONTAL & VERTICAL SECTIONS (DIRECT TO MASONRY)

NO.	DATE	REVISIONS	BY
5	7/19/23	UPDATE TO 8TH ED. (2023) FBC	LFS
4	7/21/20	UPDATE TO 7th ED (2020) FBC	LFS
3	10/09/18	REV. DOOR PANEL OPTION NOTE	MT
2	11/15/17	RECESSED PANEL NOTATION	JK
1	7/7/17	UPDATE TO 6th ED (2017) FBC	JK

DATE: 8/10/16
SCALE: N.T.S.
DWG. BY: JK
CHK. BY: LFS
DRAWING NO.: FL–20461.2
SHEET 7 OF 14

© 2016 R.W. BUILDING CONSULTANTS INC.

Z:\2023 FBC Drawings\Therma-Tru\ThermaTru FL 20461\FL-20461.1-5.dwg

Notes:
1. Sill Item #'s 17, 18, 32, 34, 35, 36, 37, 38 & 39 are attached to jambs w/ (3) #8 X 2-1/2" pfh screws at each end.
   Sill Item #'s 16 & 33 are attached to jambs w/ (2) #8 X 2-1/2" pfh screws at each end.
   Sill Item #15 is attached to jambs utilizing (2) #10 X 2" pph SMS at each end.
2. Sidelite assembly screws located 4" from each end (2 screws along sill).

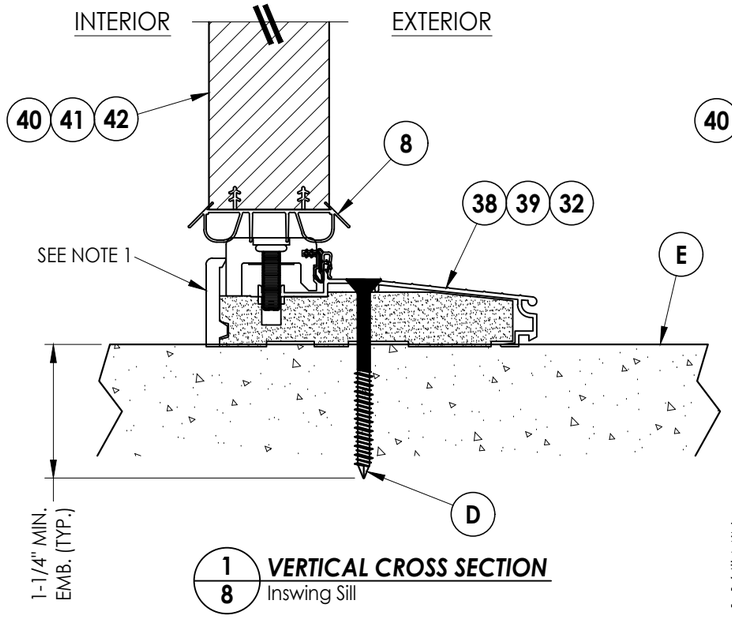

1/8 **VERTICAL CROSS SECTION**
Inswing Sill

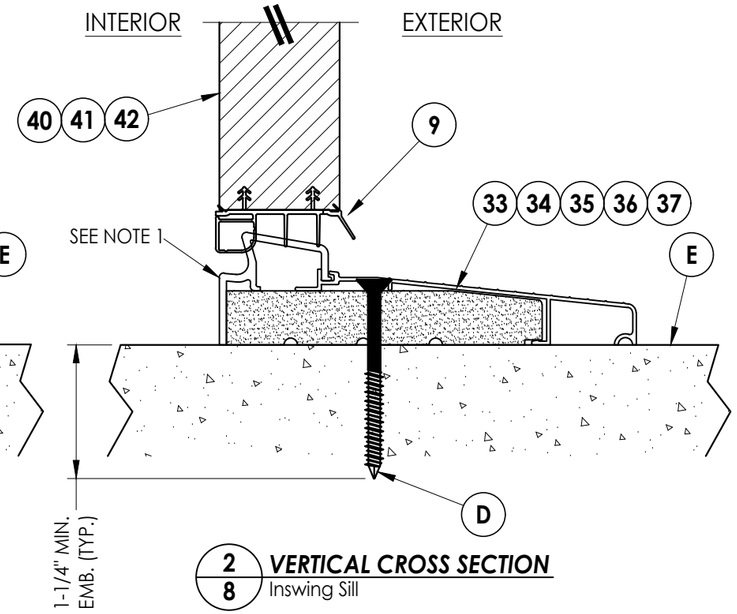

2/8 **VERTICAL CROSS SECTION**
Inswing Sill

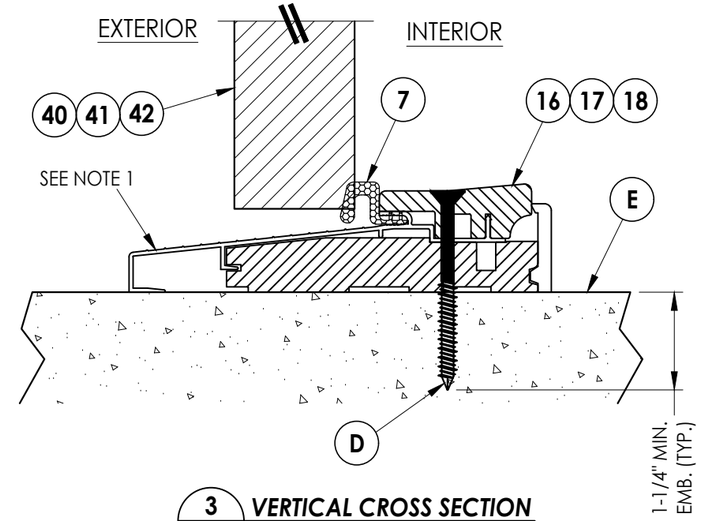

3/8 **VERTICAL CROSS SECTION**
Outswing Sill

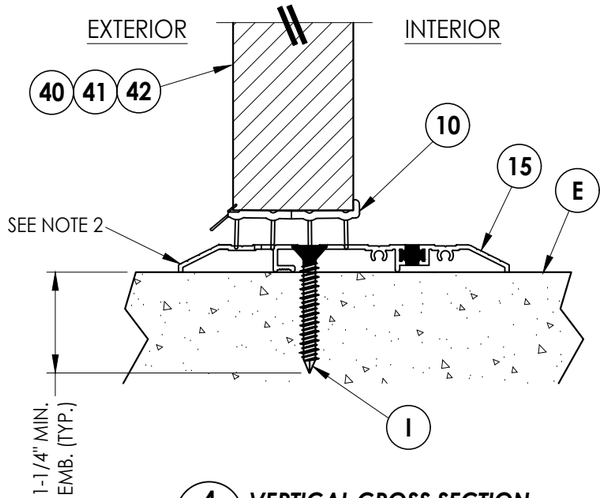

4/8 **VERTICAL CROSS SECTION**
Public Access Sill

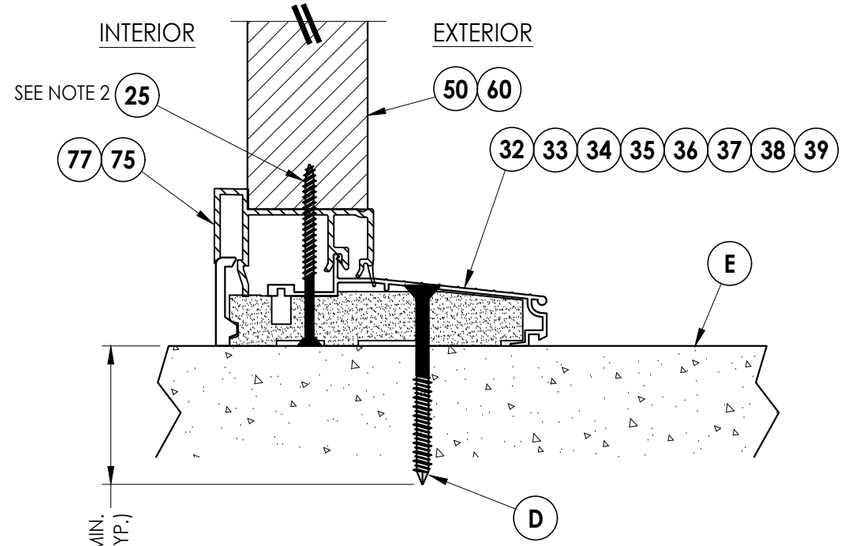

5/8 **VERTICAL CROSS SECTION**
Inswing Sill

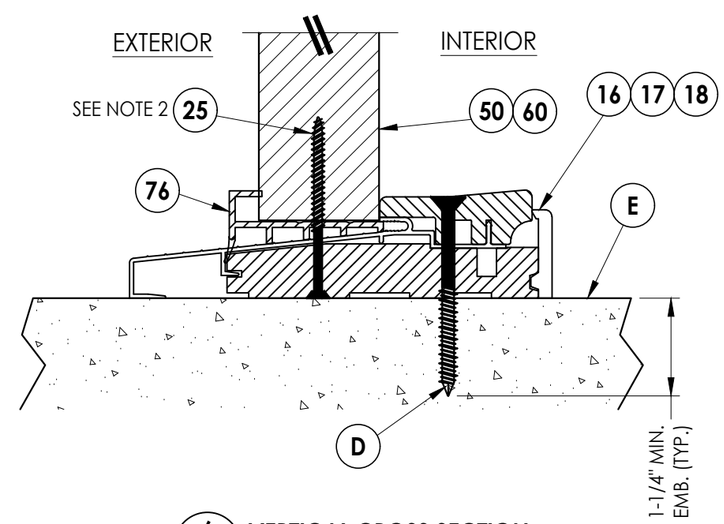

6/8 **VERTICAL CROSS SECTION**
Outswing Sill

Documents Prepared By:
Lyndon F. Schmidt
P.E. No. 43409
RW BUILDING CONSULTANTS, INC.
P.O. Box 230, Valrico, FL 33595
Phone No.: 813.659.9197
FBPE Registry No. 9813

PRODUCT: THERMA–TRU FIBERGLASS DOOR

PART OR ASSEMBLY: VERTICAL CROSS SECTIONS (THRESHOLDS)

REVISIONS

NO.	DATE		BY
5	7/19/23	UPDATE TO 8TH ED. (2023) FBC	LFS
4	7/21/20	UPDATE TO 7th ED (2020) FBC	LFS
3	10/09/18	REV. DOOR PANEL OPTION NOTE	MT
2	11/15/17	RECESSED PANEL NOTATION	JK
1	7/7/17	UPDATE TO 6th ED (2017) FBC	JK

DATE: 8/10/16
SCALE: N.T.S.
DWG. BY: JK
CHK. BY: LFS
DRAWING NO.: FL–20461.2
SHEET 8 OF 14

© 2016 R.W. BUILDING CONSULTANTS INC.

Z:\2023 FBC Drawings\Therma-Tru\ThermaTru FL 20461\FL-20461.1-5.dwg

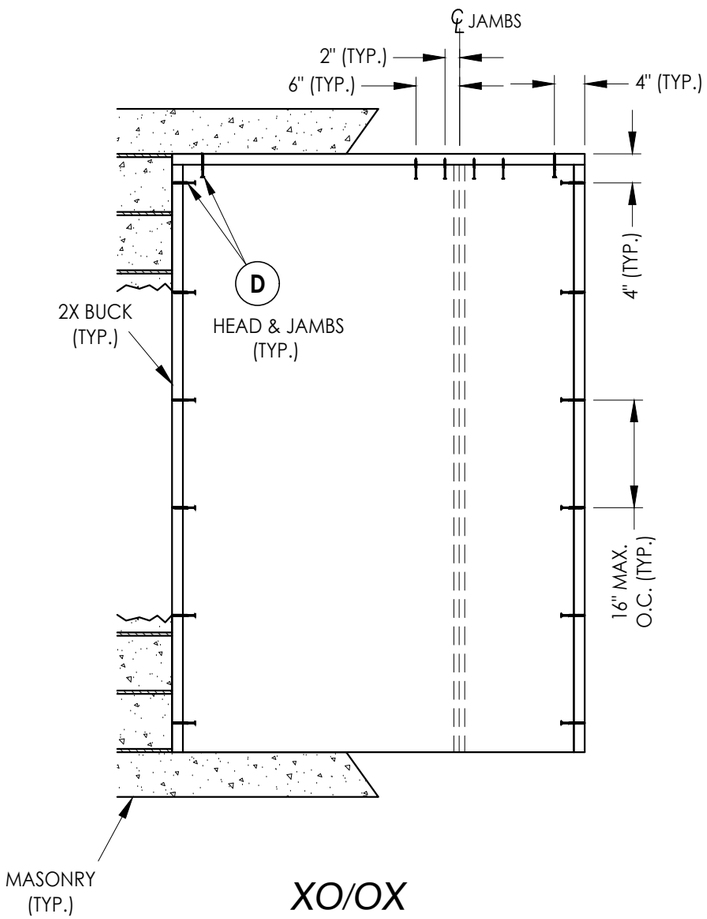

XO/OX

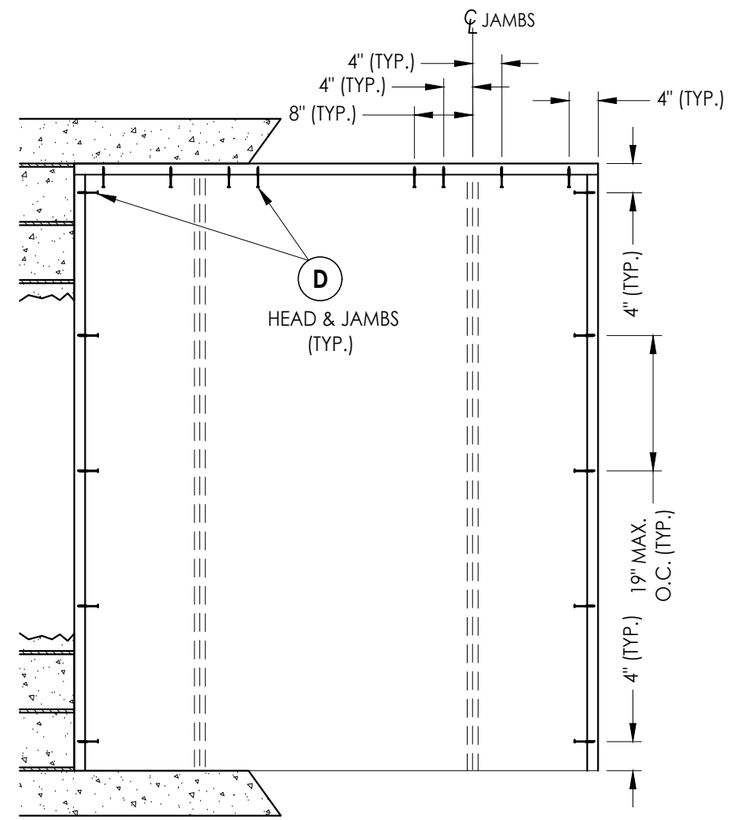

OXO

2X BUCK ANCHORING

Z:\2023 FBC Drawings\Therma-Tru\ThermaTru FL 20461\FL-20461.1-5.dwg

Documents Prepared By:
Lyndon F. Schmidt
P.E. No. 43409

R.W. BUILDING CONSULTANTS, INC.
P.O. Box 230, Valrico, FL 33595
Phone No.: 813.659.9197
FBPE Registry No. 9813

PRODUCT: THERMA-TRU FIBERGLASS DOOR

PART OR ASSEMBLY: BUCK ANCHORING

NO.	DATE	REVISIONS	BY
5	7/19/23	UPDATE TO 8TH ED. (2023) FBC	LFS
4	7/21/20	UPDATE TO 7th ED (2020) FBC	LFS
3	10/09/18	REV. DOOR PANEL OPTION NOTE	MT
2	11/15/17	RECESSED PANEL NOTATION	JK
1	7/7/17	UPDATE TO 6th ED (2017) FBC	JK

DATE: 8/10/16
SCALE: N.T.S.
DWG. BY: JK
CHK. BY: LFS
DRAWING NO.: FL-20461.2
SHEET 9 OF 14

© 2016 R.W. Building Consultants Inc.

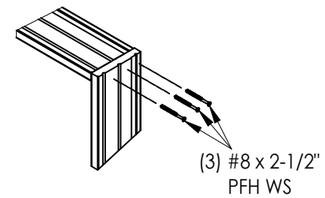

JAMB TO HEAD DETAIL
(TYP.)

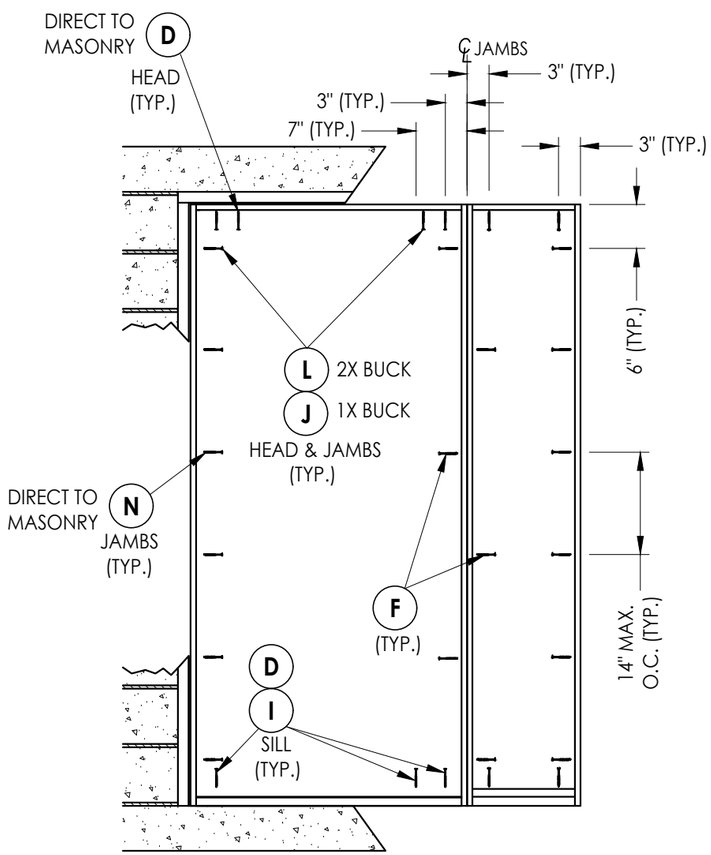

XO/OX

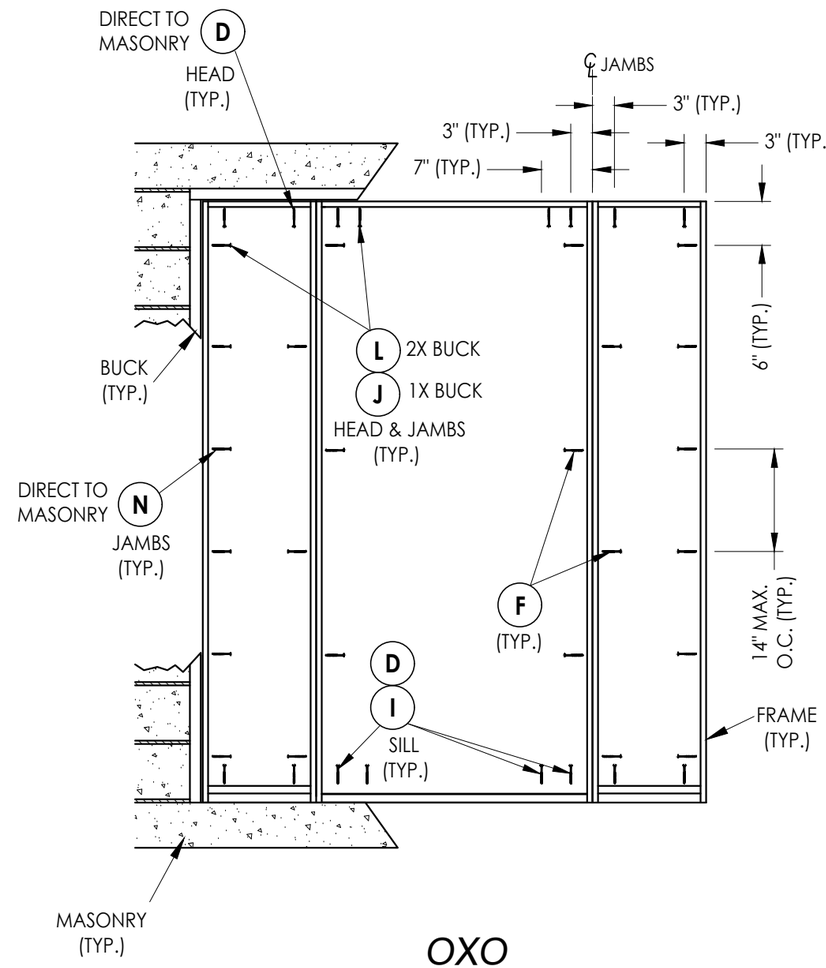

OXO

FRAME ANCHORING

Documents Prepared By:
Lyndon F. Schmidt
P.E. No. 43409

R.W. BUILDING CONSULTANTS, INC.
P.O. Box 230, Valrico, FL 33595
Phone No.: 813.659.9197
FBPE Registry No. 9813

PRODUCT: THERMA-TRU FIBERGLASS DOOR

PART OR ASSEMBLY: FRAME ANCHORING

NO.	DATE	REVISIONS	BY
5	7/19/23	UPDATE TO 8TH ED. (2023) FBC	LFS
4	7/21/20	UPDATE TO 7th ED (2020) FBC	LFS
3	10/09/18	REV. DOOR PANEL OPTION NOTE	MT
2	11/15/17	RECESSED PANEL NOTATION	JK
1	7/7/17	UPDATE TO 6th ED (2017) FBC	JK

DATE: 8/10/16
SCALE: N.T.S.
DWG. BY: JK
CHK. BY: LFS
DRAWING NO.: FL-20461.2
SHEET 10 OF 14

© 2016 R.W. Building Consultants Inc.

Z:\2023 FBC Drawings\Therma-Tru\ThermaTru FL 20461\FL-20461.1-5.dwg

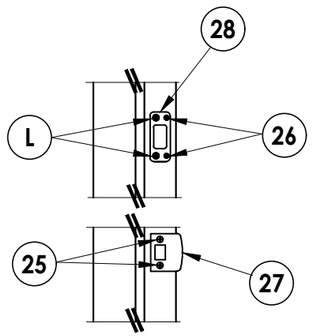

LATCH & DEADBOLT DETAIL
Kwikset

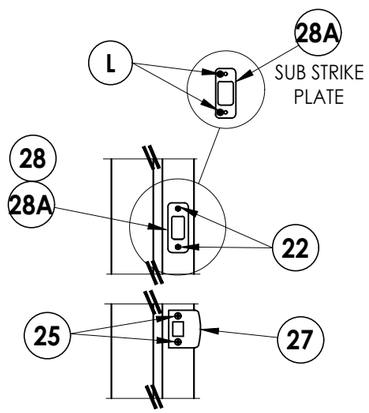

LATCH & DEADBOLT DETAIL
Schlage

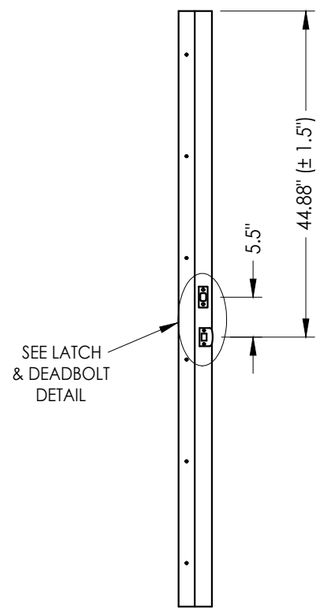

STRIKE JAMB
Latch and Deadbolt

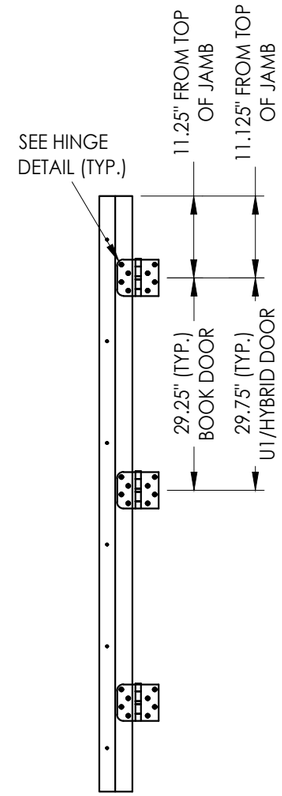

HINGE JAMB

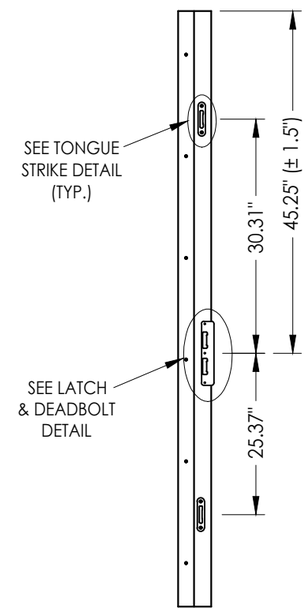

STRIKE JAMB
Multipoint Lock

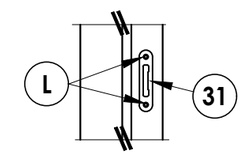

TONGUE STRIKE DETAIL
Multipoint Lock

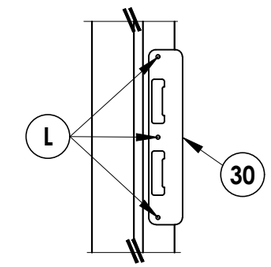

LATCH & DEADBOLT DETAIL
Multipoint Lock

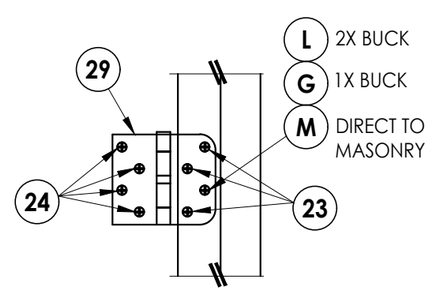

HINGE DETAIL

LATCH & DEADBOLT STRIKE DETAILS

MULTIPOINT LOCK STRIKE DETAILS

Documents Prepared By:
Lyndon F. Schmidt
P.E. No. 43409

RW BUILDING CONSULTANTS, INC.
P.O. Box 230, Valrico, FL 33595
Phone No.: 813.659.9197
FBPE Registry No. 9813

PRODUCT: *THERMA–TRU FIBERGLASS DOOR*

PART OR ASSEMBLY: *HARDWARE DETAILS*

REVISIONS

NO.	DATE		BY
5	7/19/23	UPDATE TO 8TH ED. (2023) FBC	LFS
4	7/21/20	UPDATE TO 7th ED (2020) FBC	LFS
3	10/09/18	REV. DOOR PANEL OPTION NOTE	MT
2	11/15/17	RECESSED PANEL NOTATION	JK
1	7/7/17	UPDATE TO 6th ED (2017) FBC	JK

DATE: 5/26/16
SCALE: N.T.S.
DWG. BY: JK
CHK. BY: LFS
DRAWING NO.: FL–20461.2
SHEET 11 OF 14

© 2016 R.W. Building Consultants Inc.

Z:\2023 FBC Drawings\Therma-Tru\ThermaTru FL 20461\FL-20461.1-5.dwg

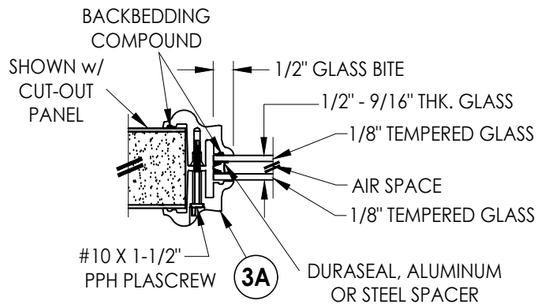

G1 GLAZING DETAIL
BTS Lite Frame
Sidelites

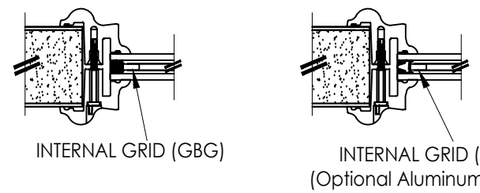

9/16" INSULATED GLASS INSERT OPTIONS

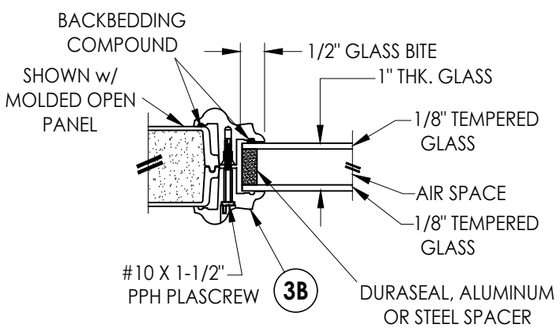

G2 GLAZING DETAIL
BTS Lite Frame
Sidelites

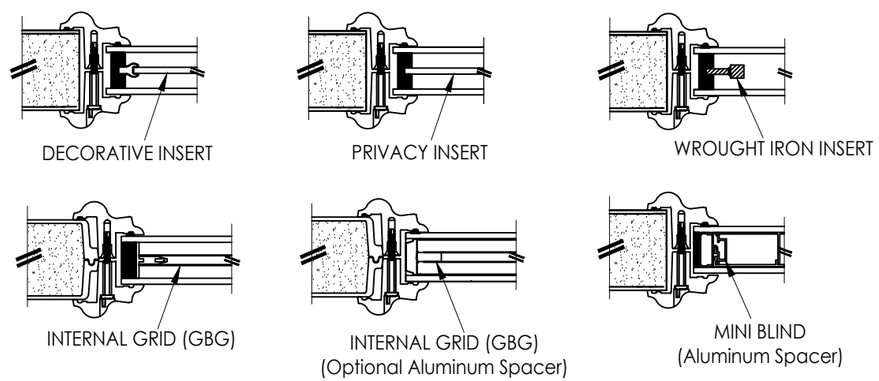

1" INSULATED GLASS INSERT OPTIONS

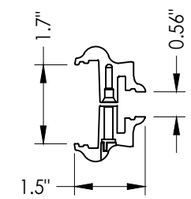

3A BTS LITE FRAME
1/2" & 9/16" Glazing

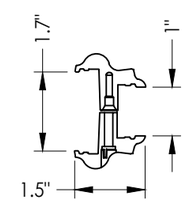

3B BTS LITE FRAME
1" Glazing

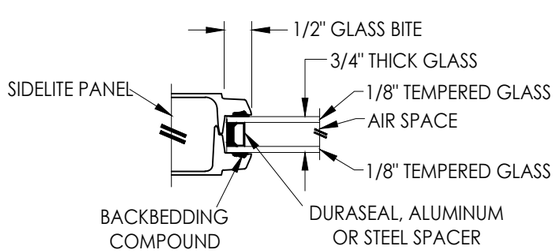

G3 GLAZING DETAIL
Flush Glazing
Sidelites

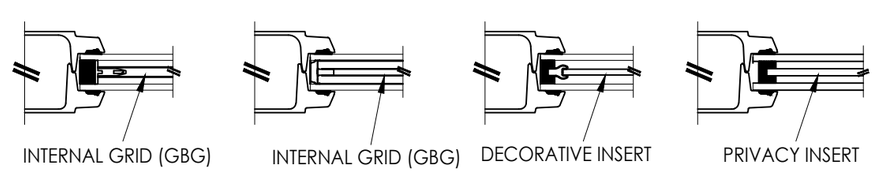

3/4" INSULATED GLASS INSERT OPTIONS

Documents Prepared By:
Lyndon F. Schmidt
P.E. No. 43409
R.W. BUILDING CONSULTANTS, INC.
P.O. Box 230, Valrico, FL 33595
Phone No.: 813.659.9197
FBPE Registry No. 9813

PRODUCT: THERMA-TRU FIBERGLASS DOOR

PART OR ASSEMBLY: GLAZING DETAILS

NO.	DATE	REVISIONS	BY
5	7/19/23	UPDATE TO 8TH ED. (2023) FBC	LFS
4	7/21/20	UPDATE TO 7th ED (2020) FBC	LFS
3	10/09/18	REV. DOOR PANEL OPTION NOTE	MT
2	11/15/17	RECESSED PANEL NOTATION	JK
1	7/7/17	UPDATE TO 6th ED (2017) FBC	JK

DATE: 8/10/16
SCALE: N.T.S.
DWG. BY: JK
CHK. BY: LFS
DRAWING NO.: FL-20461.2
SHEET 12 OF 14

© 2016 R.W. BUILDING CONSULTANTS INC.

Z:\2023 FBC Drawings\Therma-Tru\ThermaTru FL 20461\FL-20461.1-5.dwg

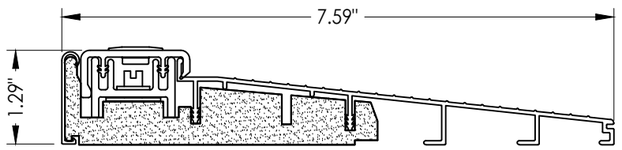

32 ***INSWING THRESHOLD***
Inswing Basic Composite Adjustable Sill 7-1/2"

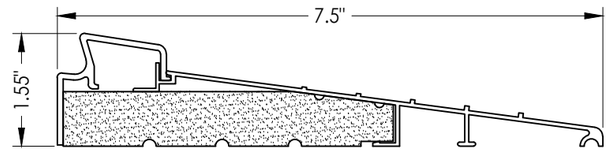

37 ***INSWING THRESHOLD***
Inswing Basic Fixed 7-1/2" Sill

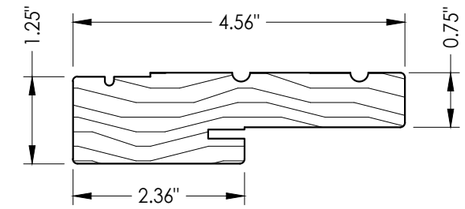

1 ***WOOD JAMB***

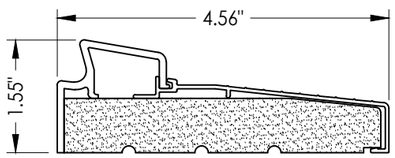

33 ***INSWING THRESHOLD***
Inswing Basic Fixed Sill

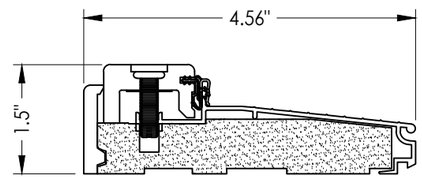

38 ***INSWING THRESHOLD***
Inswing Composite Adjustable Sill

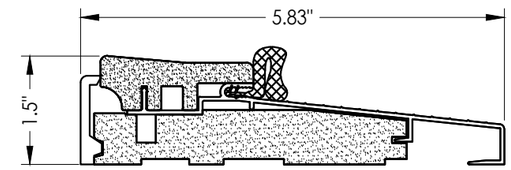

16 ***OUTSWING THRESHOLD***
Composite Sill

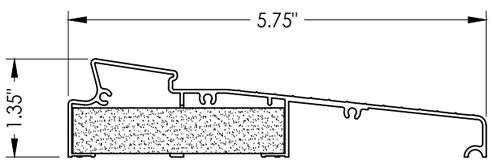

34 ***INSWING THRESHOLD***
Inswing Moderate Climate Sill 1-3/8"

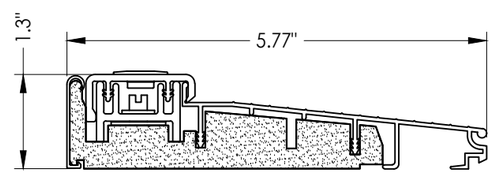

39 ***INSWING THRESHOLD***
Inswing Basic Composite Adjustable Sill

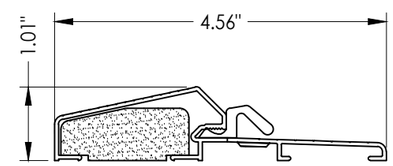

17 ***OUTSWING THRESHOLD***
Composite / Aluminum Sill

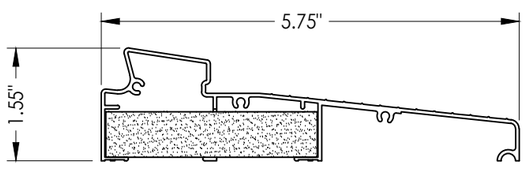

35 ***INSWING THRESHOLD***
Inswing Moderate Climate Sill

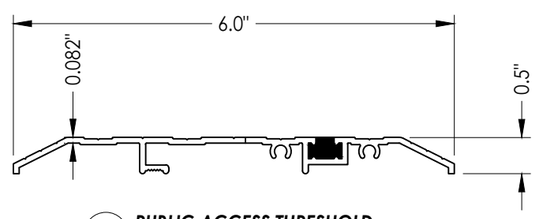

15 ***PUBLIC ACCESS THRESHOLD***

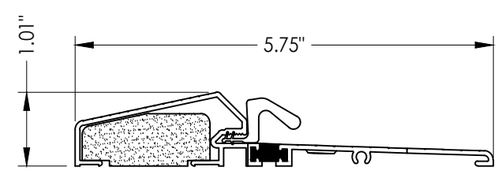

18 ***OUTSWING THRESHOLD***
Composite / Aluminum Sill
(Thermal Break)

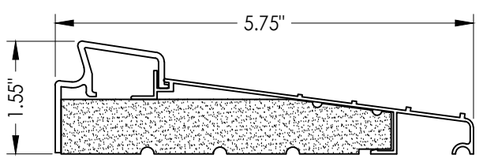

36 ***INSWING THRESHOLD***
Inswing Basic Fixed 5-3/4" Sill

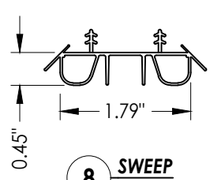

8 ***SWEEP***

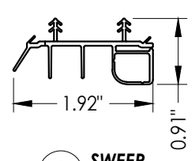

9 ***SWEEP***

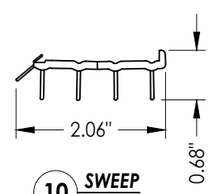

10 ***SWEEP***

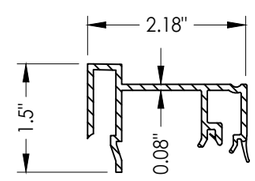

75 ***SIDELITE SPACER***
Inswing

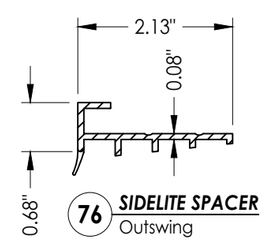

76 ***SIDELITE SPACER***
Outswing

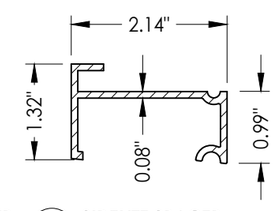

77 ***SIDELITE SPACER***
Inswing
Moderate Climate Threshold

Documents Prepared By:
Lyndon F. Schmidt
P.E. No. 43409

RW BUILDING CONSULTANTS, INC.
P.O. Box 230, Valrico, FL 33595
Phone No.: 813.659.9197
FBPE Registry No. 9813

PRODUCT: *THERMA–TRU FIBERGLASS DOOR*

PART OR ASSEMBLY: *COMPONENTS*

NO.	DATE	REVISIONS	BY
5	7/19/23	UPDATE TO 8TH ED. (2023) FBC	LFS
4	7/21/20	UPDATE TO 7th ED (2020) FBC	LFS
3	10/09/18	REV. DOOR PANEL OPTION NOTE	MT
2	11/15/17	RECESSED PANEL NOTATION	JK
1	7/7/17	UPDATE TO 6th ED (2017) FBC	JK

DATE: 8/10/16
SCALE: N.T.S.
DWG. BY: JK
CHK. BY: LFS
DRAWING NO.: FL–20461.2
SHEET 13 OF 14

© 2016 R.W. Building Consultants Inc.

Z:\2023 FBC Drawings\Therma-Tru\ThermaTru FL 20461\FL-20461.1-5.dwg

BILL OF MATERIALS

ITEM #	DESCRIPTION	MATERIAL
A	1X BUCK (SG >= 0.42)	WOOD
B	2X BUCK (SG >= 0.42)	WOOD
C	1/4" MAX. SHIM SPACE	-
D	1/4" X 2-3/4" PFH DeWALT OR ITW CONCRETE SCREW	STEEL
E	MASONRY - 3,000 PSI MIN. CONCRETE CONFORMING TO ACI 301 OR HOLLOW BLOCK CONFORMING TO ASTM C90	CONCRETE
F	#10 X 2" PFH WOOD SCREW	STEEL
G	3/16" X 3-1/4" ITW CONCRETE SCREW	STEEL
I	1/4" X 1-3/4" PFH DeWALT OR ITW CONCRETE SCREW	STEEL
J	1/4" X 3-3/4" PFH DeWALT OR ITW CONCRETE SCREW	STEEL
L	#10 X 2-1/2" PFH WOOD SCREW (1.15" MIN. EMBEDMENT)	STEEL
M	3/16" X 2-1/4" ITW CONCRETE SCREW	STEEL
N	3/16" X 2-3/4" ITW CONCRETE SCREW	STEEL
1	JAMB (FINGER JOINT PINE)	WOOD
6	WEATHERSTRIP (MEDIUM REACH)	FOAM
7	WEATHERSTRIP (LONG REACH)	FOAM
8	SWEEP	VINYL
9	SWEEP (USE w/ MODERATE CLIMATE THRESHOLD)	VINYL
10	SWEEP (USE w/ PUBLIC ACCESS THRESHOLD)	VINYL
15	PUBLIC ACCESS THRESHOLD	ALUM
16	OUTSWING THRESHOLD	ALUM/COMP
17	OUTSWING THRESHOLD	ALUM/COMP
18	OUTSWING THRESHOLD	ALUM/COMP
22	#8 x 3/4" PFH WOOD SCREW	STEEL
23	#10 x 3/4" PFH WOOD SCREW	STEEL
24	#10 x 1" PFH WOOD SCREW	STEEL

BILL OF MATERIALS

ITEM #	DESCRIPTION	MATERIAL
25	#8 x 2-1/2" PFH WOOD SCREW	STEEL
26	#8 x 5/8" PFH WOOD SCREW	STEEL
27	LATCH STRIKE PLATE	STEEL
28	DEADBOLT STRIKE PLATE	STEEL
28A	DEADBOLT SUB STRIKE PLATE	STEEL
29	4" X 4" HINGE	STEEL
30	LATCH & DEADBOLT STRIKE PLATE (TONGUE SYSTEM)	ALUM/COMP
31	MULTIPOINT STRIKE PLATE (TONGUE SYSTEM)	ALUM/COMP
32	INSWING THRESHOLD	ALUM/COMP
33	INSWING THRESHOLD	ALUM/COMP
34	INSWING THRESHOLD	ALUM/COMP
35	INSWING THRESHOLD	ALUM/COMP
36	INSWING THRESHOLD	ALUM/COMP
37	INSWING THRESHOLD	ALUM/COMP
38	INSWING THRESHOLD	ALUM/COMP
39	INSWING THRESHOLD	ALUM/COMP
40	DOOR PANEL (BOOK)	-
41	DOOR PANEL (HYBRID)	-
42	DOOR PANEL (U1)	-
50	SIDELITE (FULL LITE)	-
60	SIDELITE (FLUSH GLAZED)	-
75	SIDELITE SPACER (INSWING)	-
76	SIDELITE SPACER (OUTSWING)	-
77	SIDELITE SPACER (INSWING) - MODERATE CLIMATE SILL	-

CONCRETE ANCHOR NOTES:

1. *Concrete anchor locations at the corners may be adjusted to maintain the min. edge distance to mortar joints.*
2. *Concrete anchor locations noted as "MAX. ON CENTER" must be adjusted to maintain the min. edge distance to mortar joints, additional concrete anchors may be required to ensure the "MAX. ON CENTER" dimension are not exceeded.*
3. *Concrete anchor table:*

ANCHOR TYPE	ANCHOR SIZE	MIN. EMBEDMENT	MIN. CLEARANCE TO MASONRY EDGE	MIN. CLEARANCE TO ADJACENT ANCHOR
ITW TAPCON®	1/4"	1-1/4"	2"	4"
DeWALT ULTRACON®+	1/4"	1-1/4"	1"	4"
ITW TAPCON®	3/16"	1-1/4"	AS SHOWN	1-1/2"

WOOD SCREW INSTALLATION NOTES:

1. *Maintain a minimum 5/8" edge distance, 1" end distance, & 1" o.c. spacing of wood screws to prevent the splitting of wood.*

Documents Prepared By:
Lyndon F. Schmidt
P.E. No. 43409
RCW BUILDING CONSULTANTS, INC.
P.O. Box 230, Valrico, FL 33595
Phone No.: 813.659.9197
FBPE Registry No. 9813

PRODUCT: THERMA-TRU FIBERGLASS DOOR

PART OR ASSEMBLY: BILL OF MATERIALS

NO.	DATE	REVISIONS	BY
5	7/19/23	UPDATE TO 8TH ED. (2023) FBC	LFS
4	7/21/20	UPDATE TO 7th ED (2020) FBC	LFS
3	10/09/18	REV. DOOR PANEL OPTION NOTE	MT
2	11/15/17	RECESSED PANEL NOTATION	JK
1	7/7/17	UPDATE TO 6th ED (2017) FBC	JK

DATE: 8/10/16
SCALE: N.T.S.
DWG. BY: JK
CHK. BY: LFS
DRAWING NO.: FL-20461.2
SHEET 14 OF 14

© 2016 R.W. BUILDING CONSULTANTS INC.

Z:\2023 FBC Drawings\Therma-Tru\ThermaTru FL 20461\FL-20461.1-5.dwg